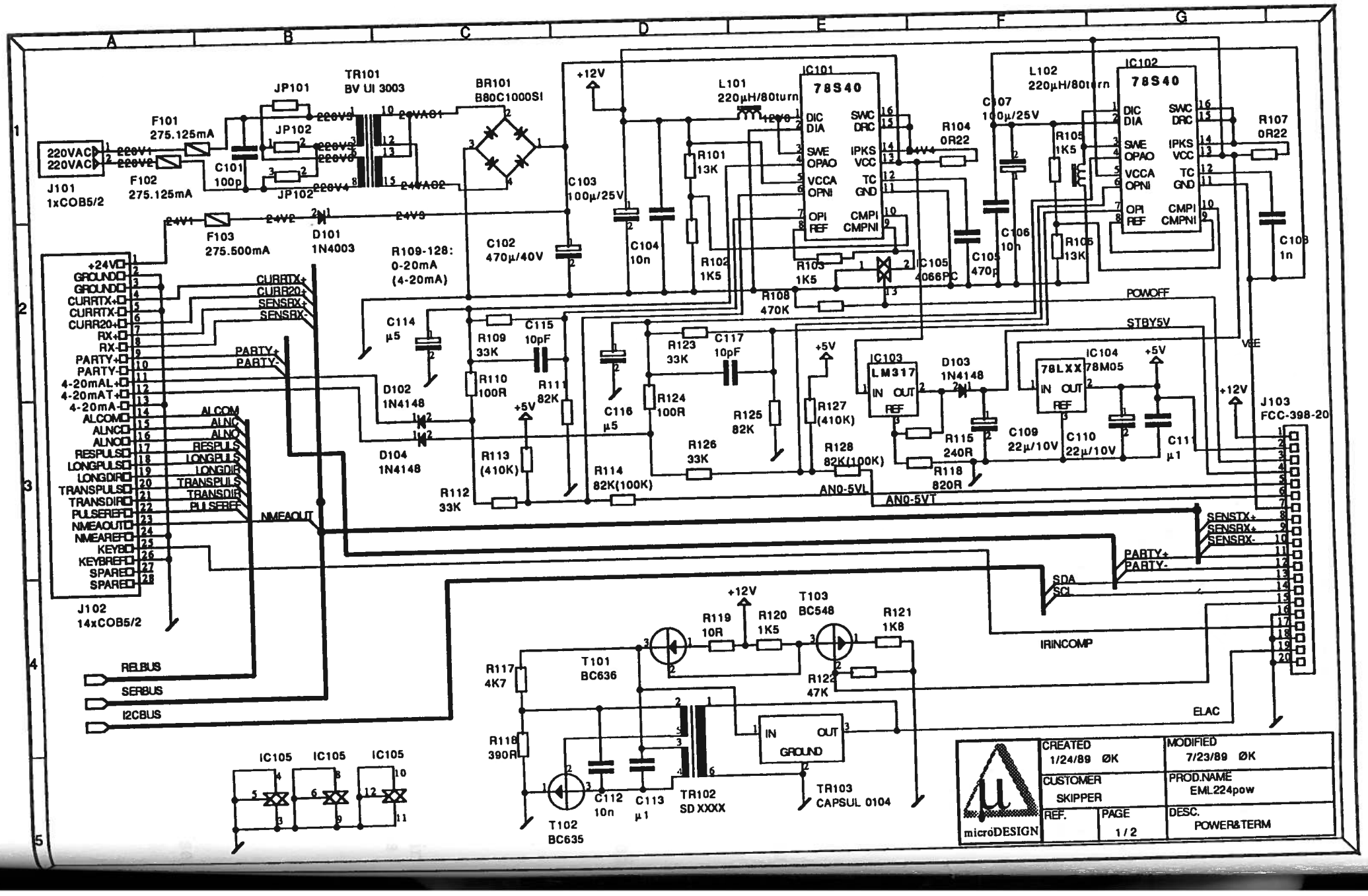

J101
1xCOB5/2
220VAC
220VAC
F101
275.125mA
F102
275.125mA
C101
100p
JP101
JP102
JP102
TR101
BV UI 3003
BR101
B80C1000SI
F103
275.500mA
D101
1N4003
R109-128:
0-20mA
(4-20mA)
C102
470µ/40V
C103
100µ/25V
+12V
C104
10n
R101
13K
R102
1K5
L101
220µH/80turn
IC101
78S40
DIC
DIA
SWE
OPAO
VCCA
OPNI
OPI
REF
SWC
DRC
IPKS
VCC
TC
GND
CMPI
CMPNI
R104
0R22
R103
1K5
IC105
4066PC
R108
470K
C105
470p
C106
10n
C107
100µ/25V
L102
220µH/80turn
IC102
78S40
R105
1K5
R106
13K
R107
0R22
C108
1n
POWOFF
STBY5V
VEE
+24V
GROUND
GROUND
CURRTX+
CURRTX-
CURR20+
RX+
RX-
PARTY+
PARTY-
4-20mAL+
4-20mAT+
4-20mA-
ALCOM
ALNC
ALNO
RESPULS
LONGPULS
LONGDIR
TRANSPULS
TRANSDIR
PULSEREF
NMEAOUT
NMEAREF
KEYB
KEYBREF
SPARE
SPARE
J102
14xCOB5/2
CURRTX+
CURR20+
SENSRX+
SENSRX-
PARTY+
PARTY-
ALCOM
ALNC
ALNO
RESPULS
LONGPULS
LONGDIR
TRANSPULS
TRANSDIR
PULSEREF
NMEAOUT
C114
µ5
D102
1N4148
D104
1N4148
R109
33K
R110
100R
C115
10pF
R111
82K
R113
(410K)
R112
33K
+5V
C116
µ5
R114
82K(100K)
R123
33K
C117
10pF
R124
100R
R125
82K
R126
33K
+5V
R127
(410K)
R128
82K(100K)
AN0-5VL
AN0-5VT
IC103
LM317
IN
OUT
REF
D103
1N4148
R115
240R
R118
820R
C109
22µ/10V
IC104
78LXX
78M05
C110
22µ/10V
C111
µ1
+12V
J103
FCC-398-20
SENSTX+
SENSRX+
SENSRX-
PARTY+
PARTY-
SDA
SCL
IRINCOMP
ELAC
RELBUS
SERBUS
I2CBUS
IC105
IC105
IC105
R117
4K7
R118
390R
T101
BC636
T102
BC635
C112
10n
C113
µ1
TR102
SD XXXX
+12V
R119
10R
R120
1K5
T103
BC548
R121
1K8
R122
47K
IN
OUT
GROUND
TR103
CAPSUL 0104
microDESIGN
CREATED
1/24/89 ØK
MODIFIED
7/23/89 ØK
CUSTOMER
SKIPPER
PROD.NAME
EML224pow
REF.
PAGE
1/2
DESC.
POWER&TERM